LCD Display

DIN48□ Multiple counter

DC-JM CE

Multiple counter with DIN size 48×48 12 pcs of counter are built-in. 1 input/ 12 preset/ 1 output

- It can choose built-in counter (No.1 to 9, A, B, C) with the front key in turn.
- Output is 1 pce and is OR output for common use for 12 pcs of built-in counter. It can check which counter is counting up with character display.
- It can use it as a total counter by setting preset value to 0.

Specifications

Type	Increment type preset counter			
Model No.	DC-JM4-DW	DC-JM4-AW	DC-JM6-DW	DC-JM6-AW
Power source	24VDC (ripple 20% or less)	100 to 240VAC (50/60Hz)	24VDC (ripple 20% or less)	100 to 240VAC (50/60Hz)
Allowable voltage fluctuation range	±10% at 24VDC, 85 to 250VAC			
Power consumption	1W (at 24VDC)	4VA*1 (at 240VAC)	1W (at 24VDC)	4VA*1 (at 240VAC)
How to mount	Panel mounting			
Front size	48×48mm			
Built-in counter numbers	12			
Preset numbers	1 pce for each counter (12 pcs)			
Output numbers	1 pce (OR output for common use for 12 pcs of built-in counter)			
Divider	———		1/100 (fixed)	
Display	LCD back-light 7-segment LCD ● Counting value: 4 digits (H 9.5mm, W 3.97mm, zero-suppress system) ● Divider: 2 digits (H 6.5mm, W 2.72mm only for DC-JM6, unit 1/100)note) ● Preset value: 4 digits(H 6.5mm, W 2.72mm) ● Counter No.: 1 digit (1～9, A, B, C, H 9.5mm, W 3.97mm) LCD character ● Count prohibition ● Output for each counter ● Output ● SET			
Counter No. choice	External input (input terminal of counter No. choice)/manual (counter choice key), increment system			
Memory function	EEP-RO (Re-writing 0.1 million times or more)			
Counting speed	30Hz: Contact, open-collector, Min.signal width 16.7msec (make ratio 1:1)			
Preset	Set by preset key, it completed after 2 sec (per each digit), min.acceptable time of preset key: 50msec			
Reset	Manual reset (set by reset key) for each counter, min.reset time 50msec			
All reset	Manual reset (set by function key and reset key) for all counters, min.reset time 50msec			
Input signal	Contact or open-collector Impedance when ON (short-circuit): 1k ohm or less, Impedance when OFF (opened): 100k ohm or more Flowing current when short-circuit: approx. 4mA Allowable residue voltage when ON: 3V or less, Flowing current when short-circuit: approx.4mA			
Control output	Transistor output (NPN open-collector): 100mA or less, 40V or less Contact output: 250VAC/30VDC 3A Resistance load (cos ϕ=1)			
Power source for sensor	———	12VDC, 50mA*2	———	12VDC, 50mA*2
Ambient temperature	-10 to +50℃ (-25 to +55℃ when stored)			
Ambient humidity	35 to 85%RH or less (not icing, not condensing)			
Vibration resistance	Double amplitude 4mm, 16.7Hz, each 1 hour in X, Y and Z directions. Malfunction: Double amplitude 0.5mm, 10 to 55Hz, each 10 minutes in X, Y and Z directions			
Impact resistance	294m/s², each 3 times in X, Y and Z directions. Malfunction: 98m/s², each 3 times			
Starting time when power-ON	2sec or less			
Protective structure	IP66 (IEC Standard, only front panel when using rubber packings)			
Case material	Polycarbonate			
Weight	Approx. 120g			

Accessory	Mounting hook, rubber packings, tightening screw for terminal cover (M3×8 P tight)

note) Regarding DC-JM4(4 digits type), in case of using built-in counter of counter No.0 as total counter with 6 digits, lower 2 digits of counting value are displayed.
*1. Including external power source.
*2. 100mA is available when using with 120VAC or less.
★Dust-proof cover(GZ00007) is available as option.

■ Input/Output circuit

Input (Count1/count2/reset)

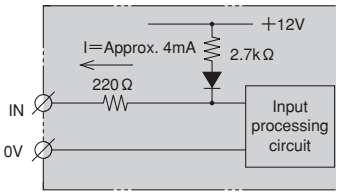

Output (1C relay)

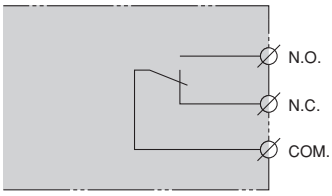

Output (PNP open-collector)

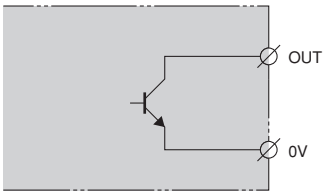

■ Connection

AC power

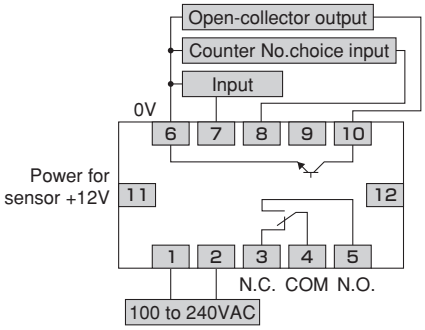

DC power

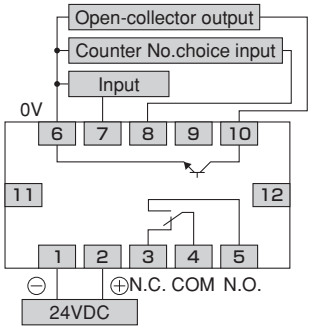

Note) This type doesn't provide power for sensor.

(Caution)
- Don't use empty terminal as relay terminal.
- Each input for counting and reset is common use for contact and trnasistor. Make a wiring with 2-core shield wire and metal conduit as short as possible. Also, don't make a wiring with power and high voltage line etc.
- Use solderness terminal for M3.

External dimensions

Counter

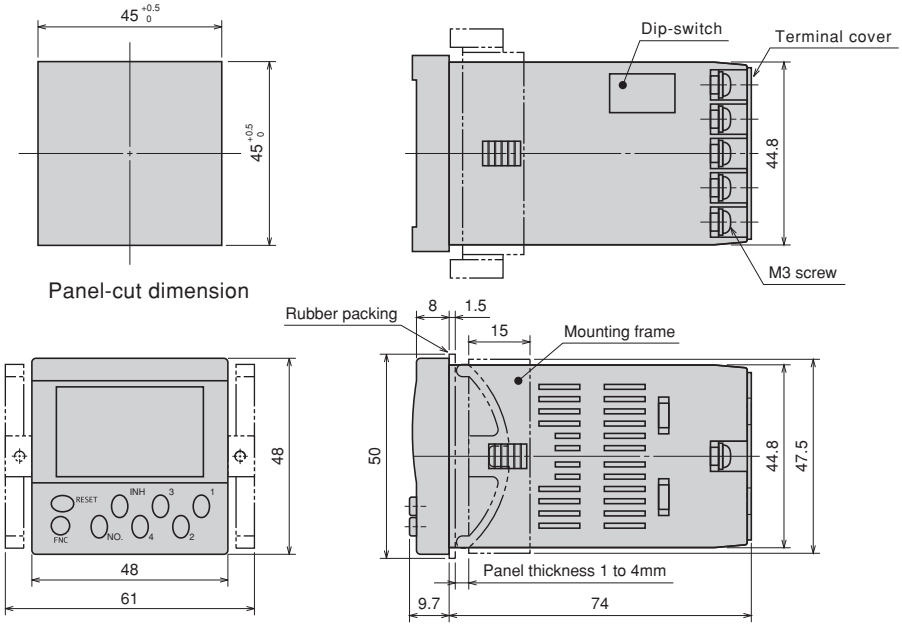

Mounting panel (GZ00003)
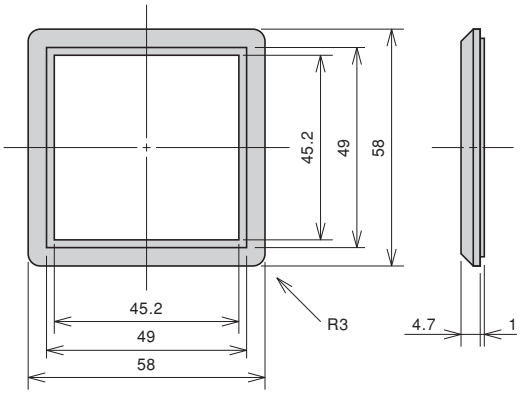
Use this frame if you are using counters with 60×60, panel-cut size such DC-NXB, DC-S, DC-H series etc.